THULE SWEDEN

SUP TAXI 810

› Instructions

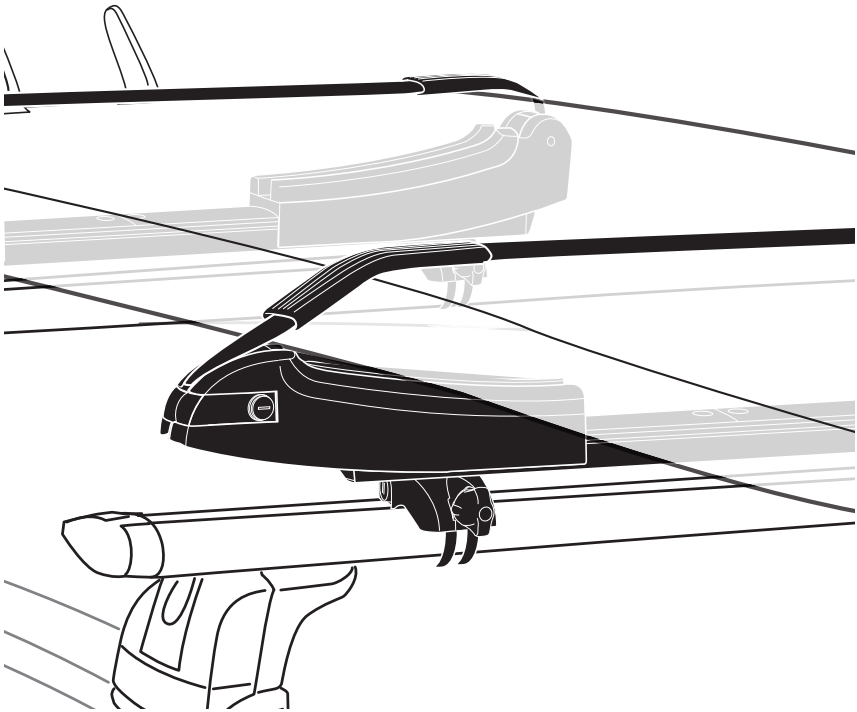

810000
4DF/8.20130401.
501-7657-03

Bring your life
thule.com

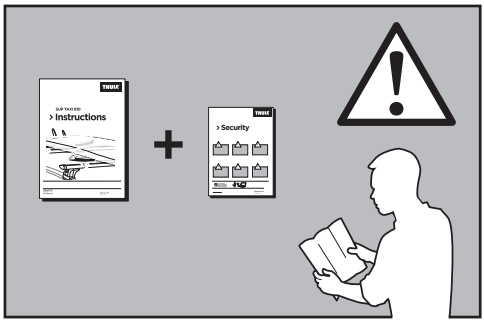
THULE
› Instructions
THULE
› Security

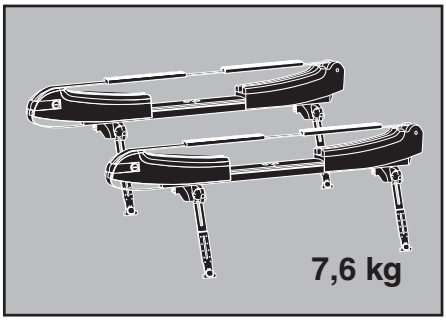
7,6 kg

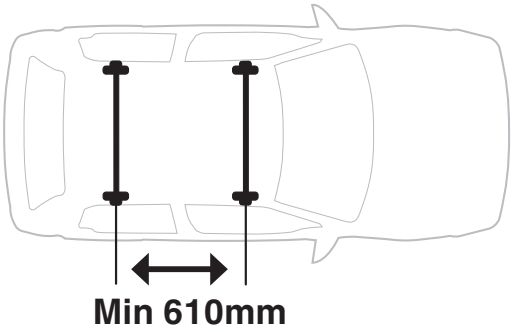
Min 610mm

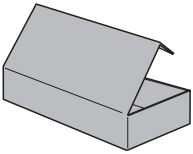

x2
x4
x2

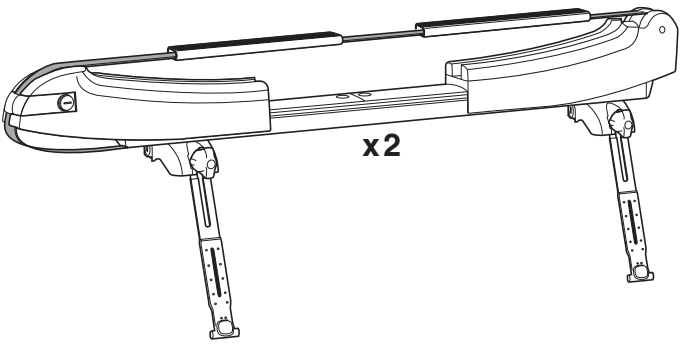
x2

x1

x1

1

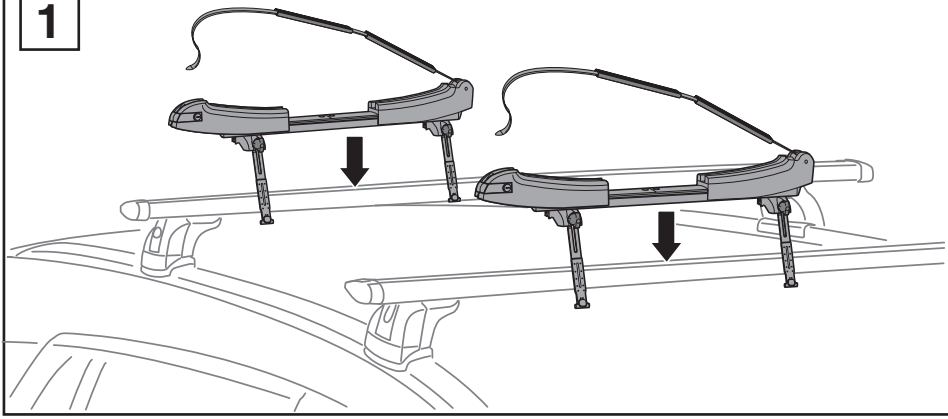

2

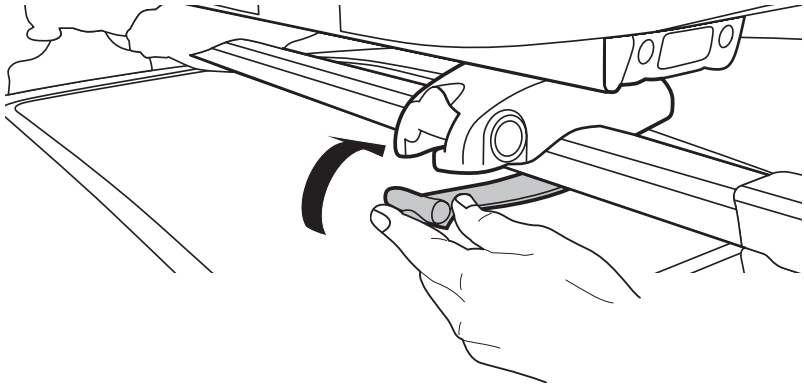

3

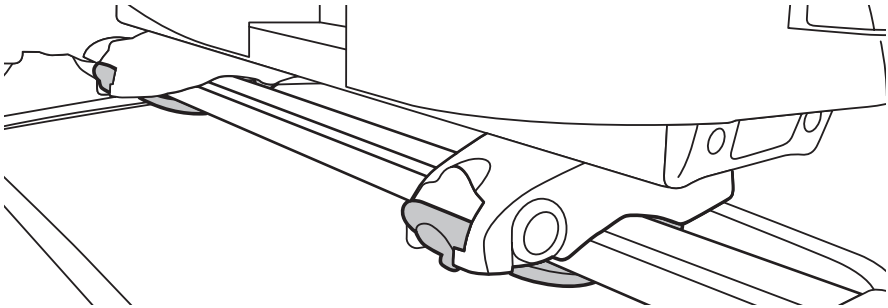

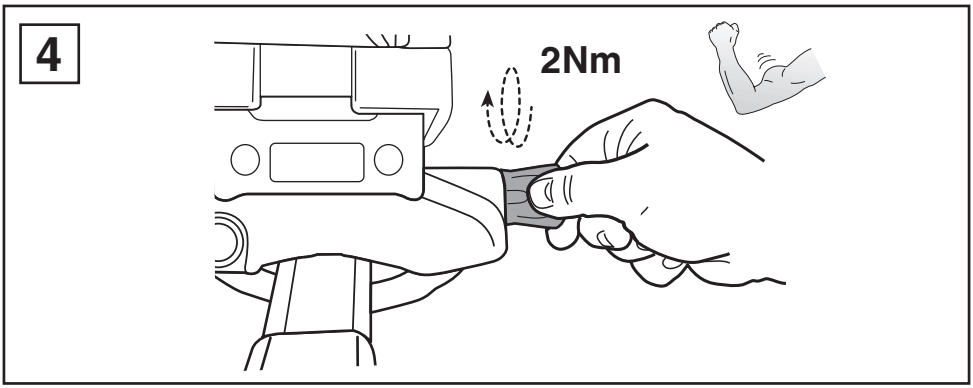
4
2Nm

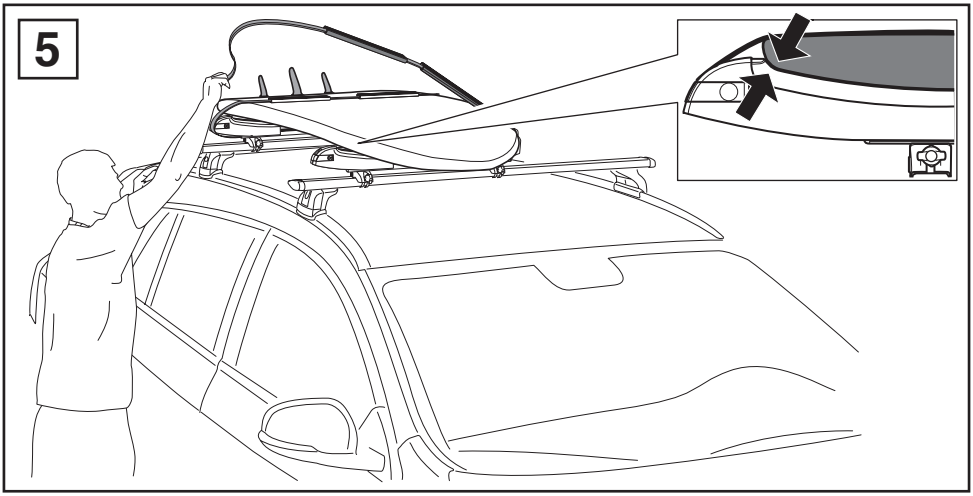
5

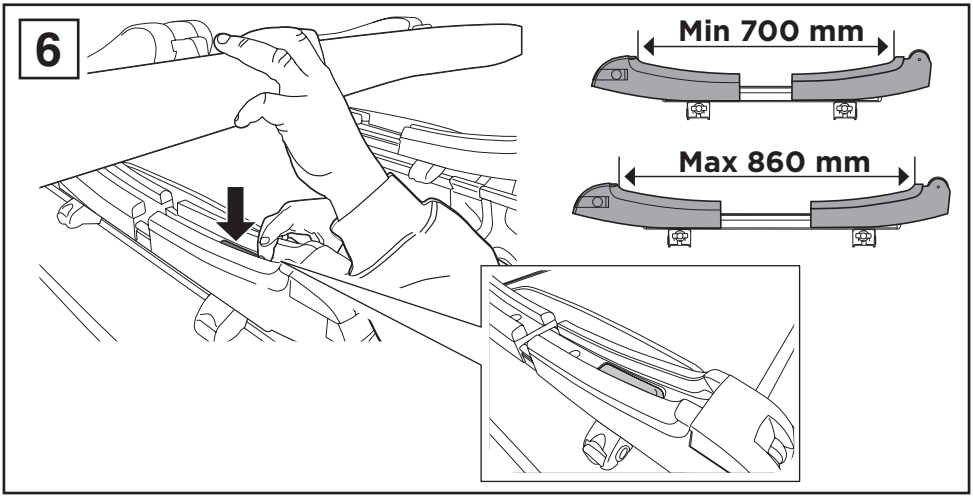
6
Min 700 mm
Max 860 mm

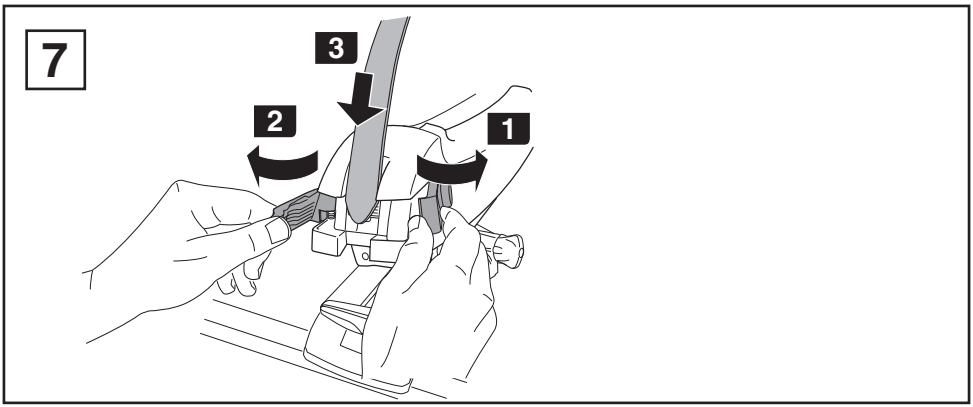
7
3
2
1

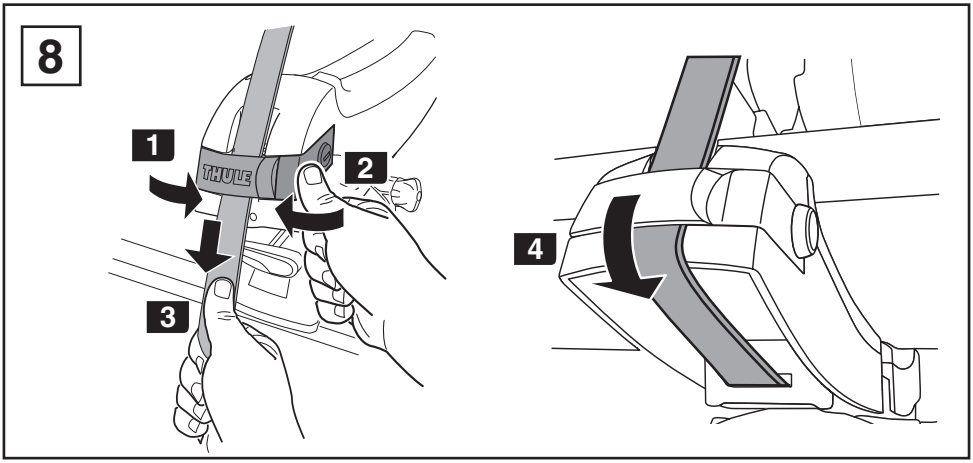
8
1
2
3
THULE
4

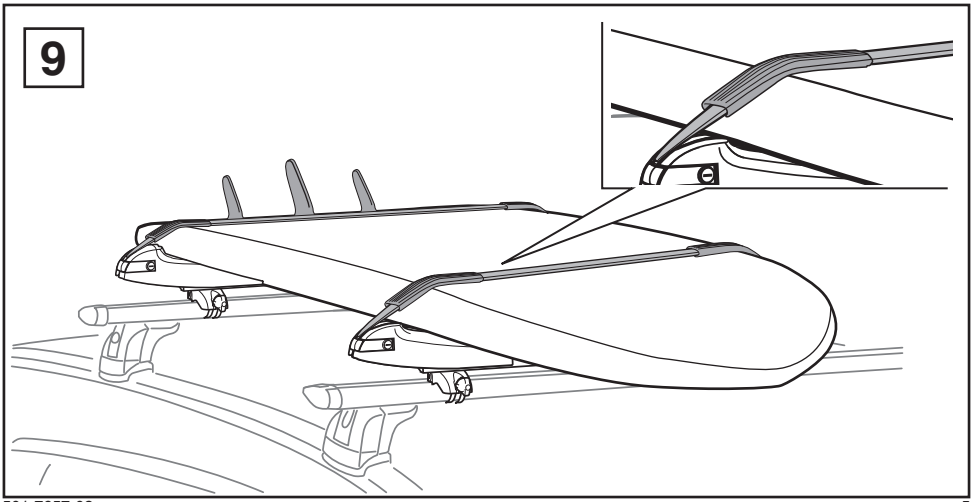
9

10

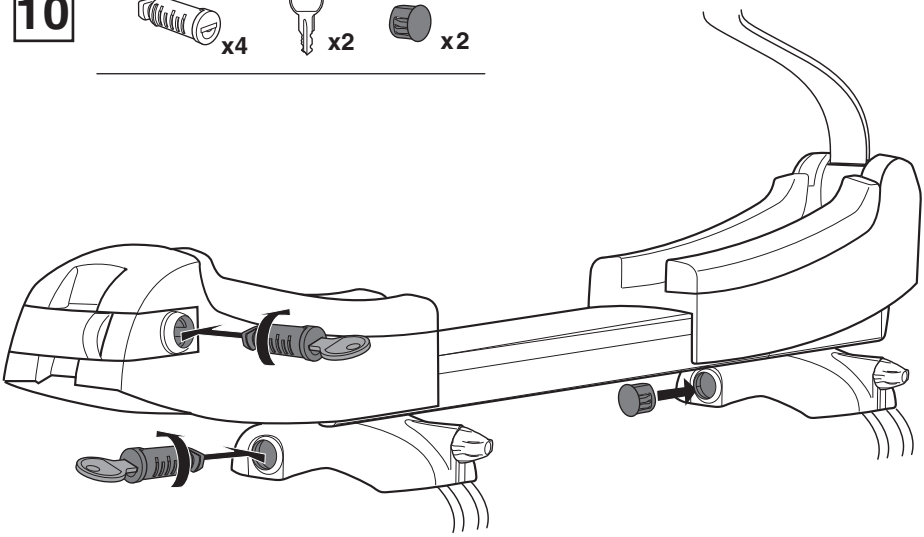

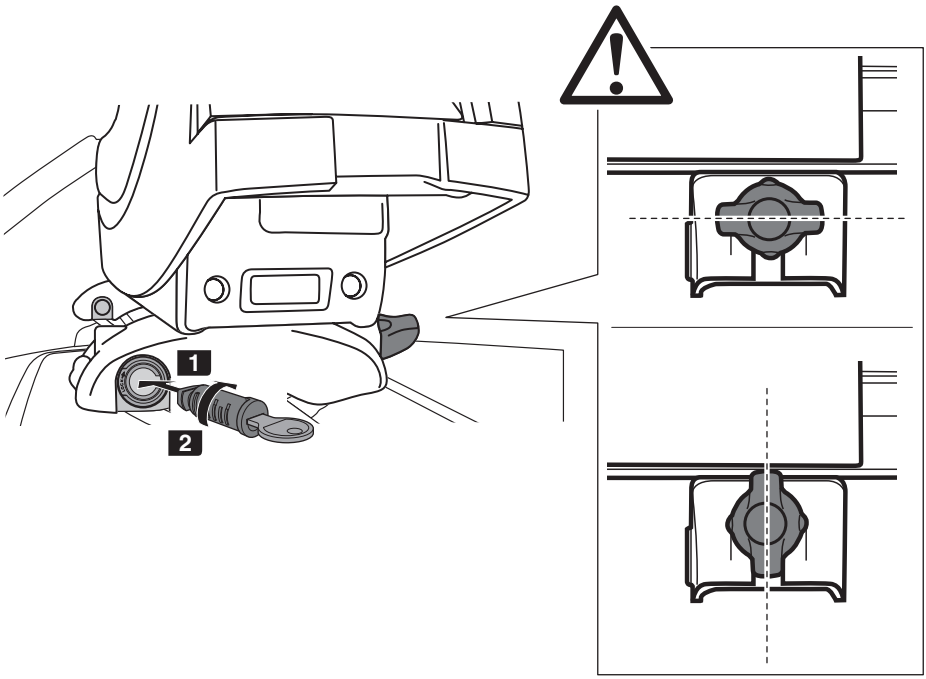

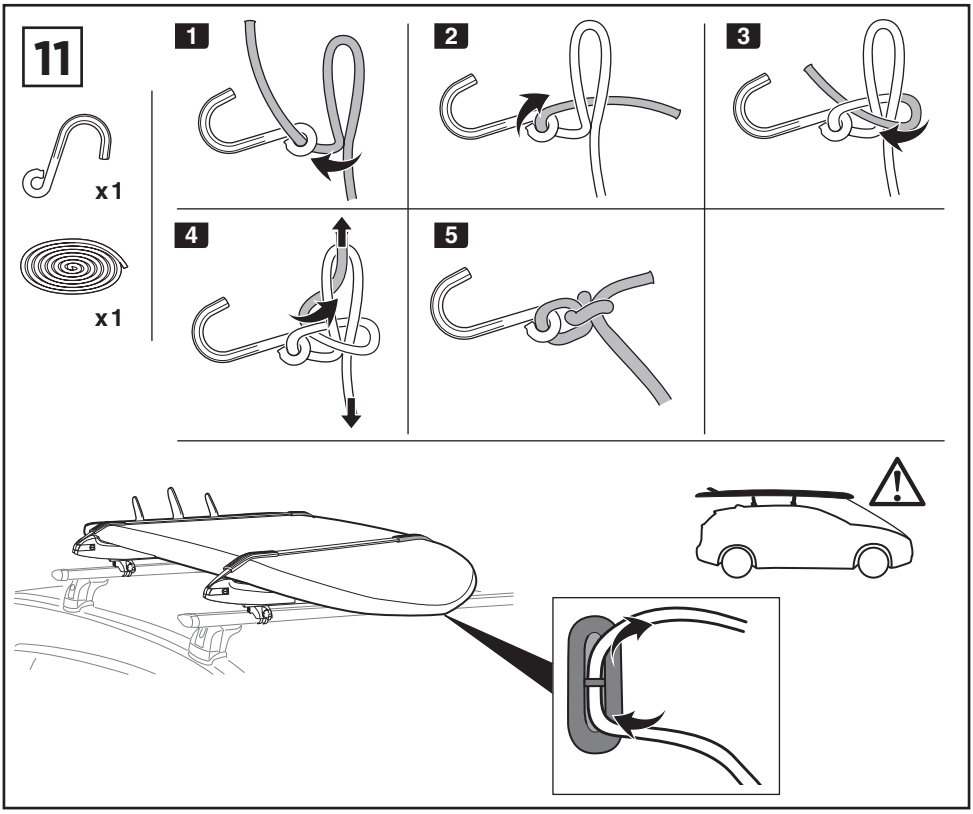
11
x1
x1
1
2
3
4
5

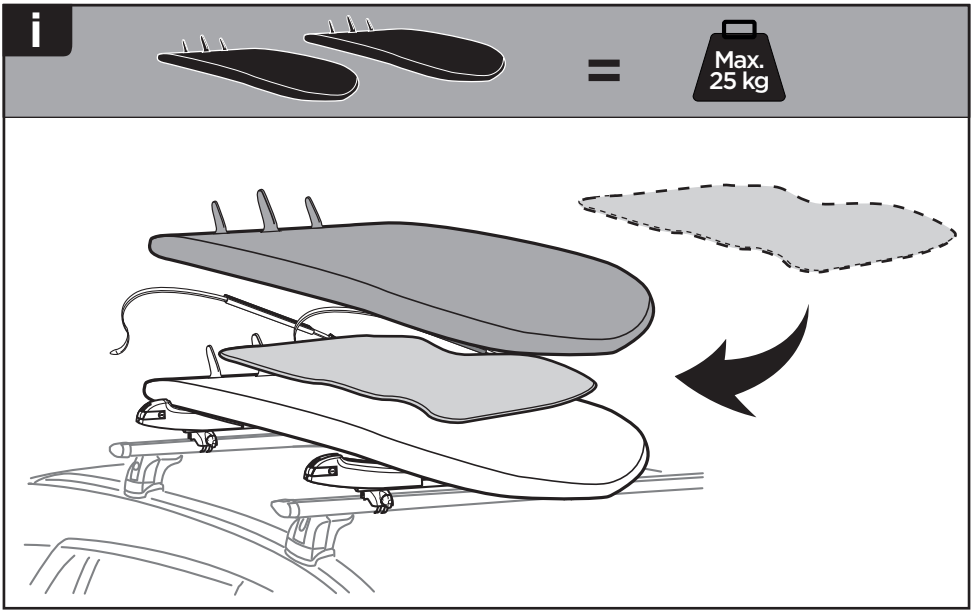
i
=
Max.
25 kg

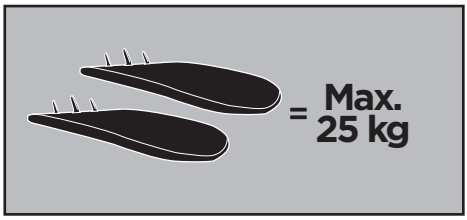

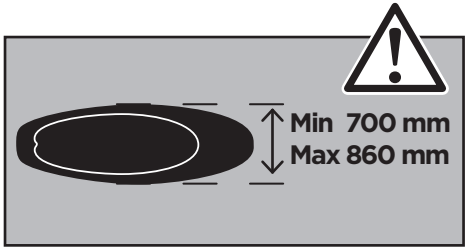

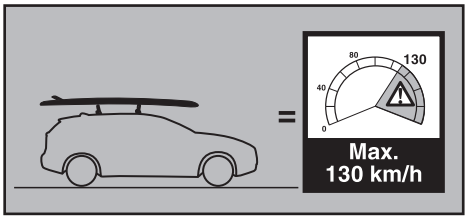

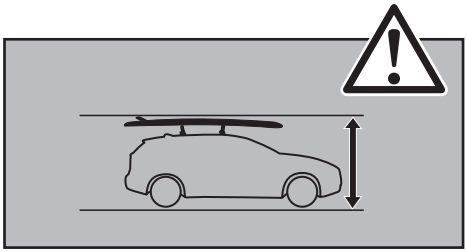

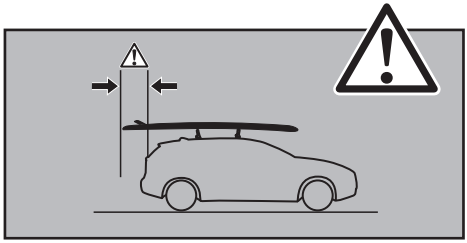

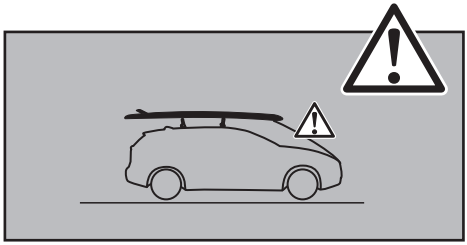

One Key System
544, 596
588, 452

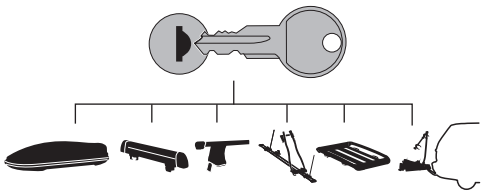

544 (x4)
596 (x6)
588 (x8)
EUR ASIA 452 (x12)